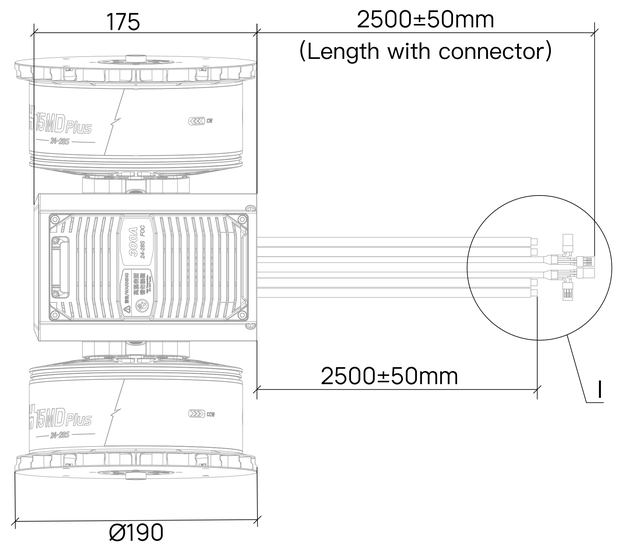
175
2500±50mm
(Length with connector)
2500±50mm
I
Ø190

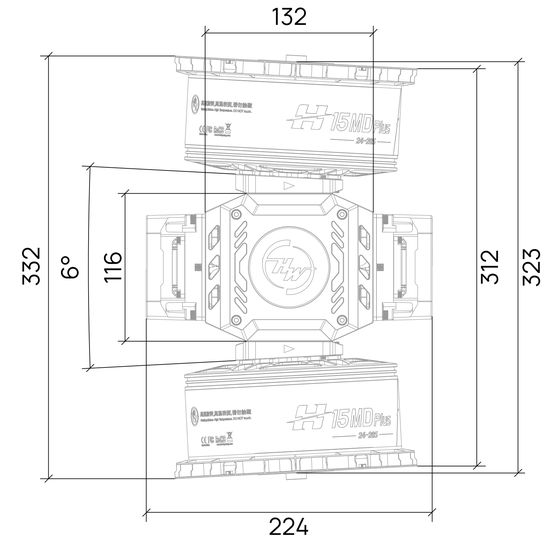
132
332
6°
116
312
323
224

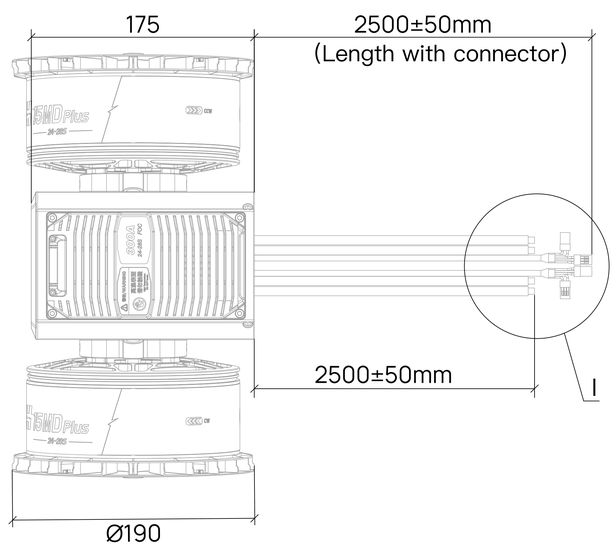
175
2500±50mm
(Length with connector)
2500±50mm
I
Ø190

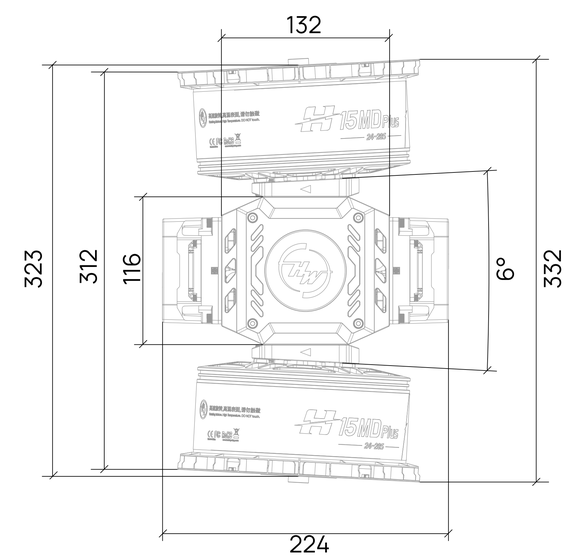
132
323
312
116
6°
332
224

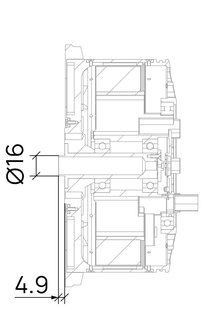
Ø16
4.9

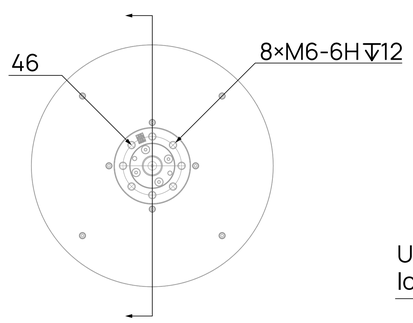
46
8×M6-6H↧12

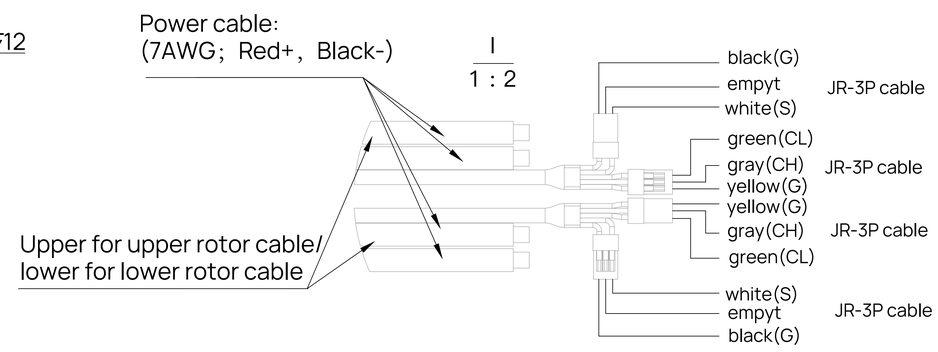
Power cable:
(7AWG; Red+, Black-)
I
1 : 2
Upper for upper rotor cable/
lower for lower rotor cable
black(G)
empyt
white(S)
JR-3P cable
green(CL)
gray(CH)
yellow(G)
JR-3P cable
yellow(G)
gray(CH)
green(CL)
JR-3P cable
white(S)
empyt
black(G)
JR-3P cable

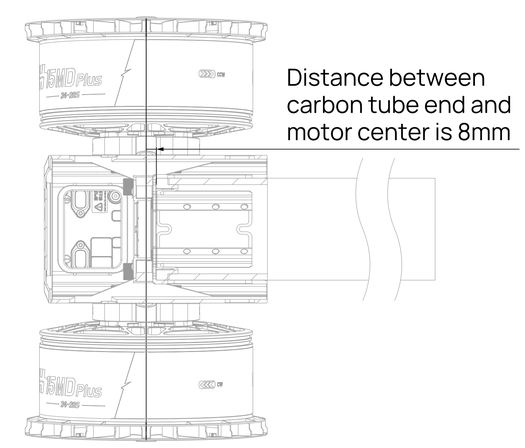
Distance between
carbon tube end and
motor center is 8mm